OPERATION MANUAL FOR

xRover REHA – model L

The exclusive manufacturer and originator is the company:

Volter s.r.o., ID: 29051886, E-mail: info@volter.cz
Made in the Czech Republic

Thank you for purchasing the multifunctional medical xRover medical stroller/trolley and we believe that it will serve you for a long time.

The multifunctional medical stroller can be used as:

1/ Implementation - medical trolley

2/ Implementation - medical trolley for usage in a rough terrain

NOTICE
Please read this operation manual carefully before using the xRover medical stroller/trolley.

CONTENTS

General description	1
Contents	2
General notices	3
Technical data	4
Maintenance, care and storage of medical stroller/trolley	6
Safety instructions	7
1. Assembly/disassembly of medical stroller/trolley	9
1.1 Rear axle	9
1.2 Front axle	12
2. Adjusting the required medical stroller/trolley wheel alignment	14
3. Brake adjustment	17
4. Handle	18
5. Canopy	19
6. Fastening the transported person	20
7. Carrying the medical stroller with load	21
8. Other accessories	21
8.1 Mosquito net, windstopper, and waterproof	21
8.2 Rear bag	24
8.3 Safety hand strap	25
8.4 Fixation insert	25
8.5 Winter bag	27
8.6 Additional bags	28

GENERAL NOTICES

This manual contains a number of WARNINGS and NOTICES. Incorrect assembly or incorrect use of the medical stroller/trolley may lead to serious or fatal injuries of passengers or operating persons.

- Car seats placed inside the medical stroller/trolley and any other seats must be fixed with additional straps.
- Do not make any modifications on the medical stroller/trolley.
- The medical stroller may become unstable if a bag or net not approved by the manufacturer is attached to it.
- Avoid contact of the moving parts of the medical stroller/trolley by any part of children's and other passengers' bodies, clothes, laces or toys.
- Never leave children and other passengers in the medical stroller/trolley unattended.
- Failure to follow the instructions may lead to a serious or fatal injury of you or your passengers.
- The maximum load capacities of medical strollers are described in chapter "Technical data", page 4.
- Do not use individual models for passengers exceeding the specified weight limit.
- Do not use chemical cleaning agents. Only clean with mild soap and water.
- Passengers must always use the straps and sit in the middle.
- The maximum tyre inflation pressure is shown in the technical specification; a lower pressure may cause worse driving properties, a higher pressure may cause a flat tyre or tyre damage.
- Be careful during assembly and disassembly and avoid squeezing your fingers, parts of clothing or other undesired objects.

When using the medical stroller/trolley in the version for movement in a rough terrain, pay attention to the following:

- Always use the safety wrist strap which must be fixed firmly to the frame of the medical stroller/trolley.
- At standstill, always apply the parking brake. See Page 18, Figure 26.
- The maximum load capacity in the rear storage space is 5 kg + other stored components of the medical stroller/trolley. If the bag is overloaded, the medical stroller may become unstable.
- Always use additional inserts for children (persons) who cannot sit upright without support.
- Always make sure that also the rear axle alignment is adjusted correctly after any handling and modification of the front axle of the medical stroller/trolley, see Page 16, Figure 22.
- Reflectors, reflecting and signalling elements meeting the regulations must not be removed from the medical stroller/trolley and must be in original positions at all times.
- Always use additional inserts for children (persons) who cannot sit upright without support.

TECHNICAL DATA

The medical stroller is primarily designed for transport of persons, but it can also be used for transport of loads up to the weight according to the technical data for the given size of the medical stroller/trolley. The drive or movement is provided solely by another person (other persons), preferably by pushing (at the handle of the medical stroller/trolley); the frame of the medical stroller/trolley is designed also for the possibility to be carried at the outer tubes (after removing the cloth fenders).

Your medical stroller/trolley model is size "L" – large. The manufacturer also provides models "S" – small and "M" – medium. The sizes only differ with the frame and cloth covering, the other components remain identical in all sizes.

Size "L"

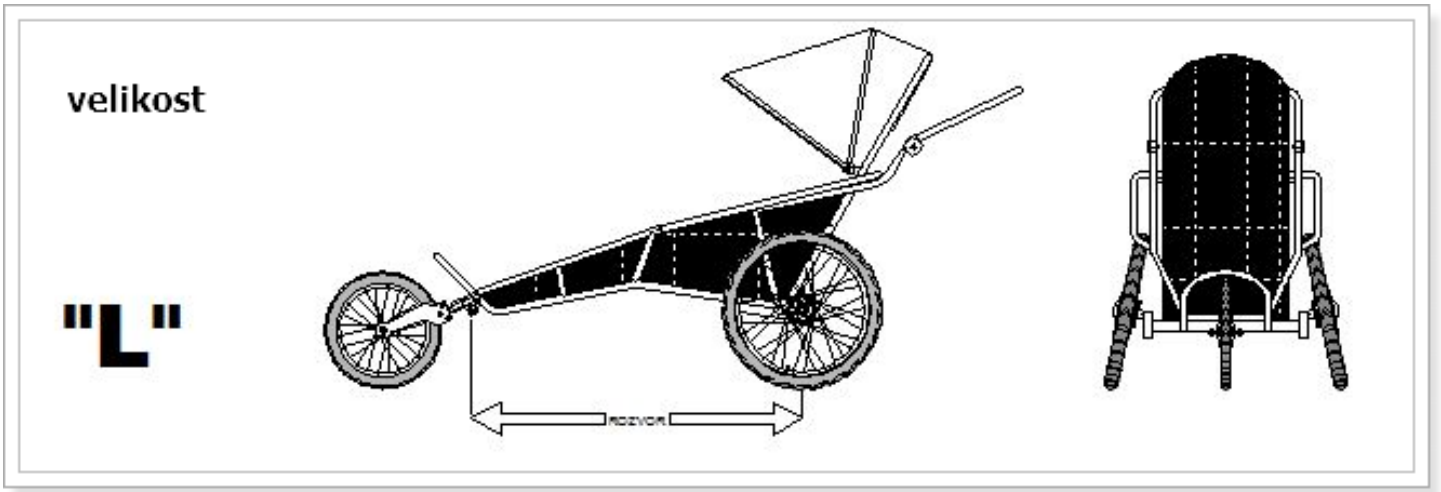

Figure 1

Frame weight:	L – 4.8 kg
Frame material:	- aluminium alloys EN AW 6060, 6061, 6082
Curb weight:	depending on installed components and equipment (example: size "S" + 6" front wheel + canopy – 13.4 kg)
Wheel gauge (track width):	ca. 76 cm (guaranteed passage through 80cm door frame)
Wheel-base (rear axle – cross tube of front axle):	L – 1045 mm
Parameters of transported person: (load weight)	L – 120 kg/ca. 185 cm
Rear wheels:	20" with integrated 70mm drum brakes
Wheel material:	- aluminium centre and rim, steel wire spokes (for S, M, L) - plastic (for S only)
Rear wheel tyre:	20 x 1.75 (47–406)
Rear wheel tyre inflation pressure:	3.1–4.2 bar, car tyre valve. Max. pressure in one tyre 4.2 bar!
Front wheel 1:	14"
Wheel material:	- aluminium centre and rim, steel wire spokes (for S, M, L) - plastic (for S only)
Front wheel tyre 1:	14x1.75 (47–254)
Front wheel inflation pressure 1:	2.8 bar, car tyre valve. The max. pressure in one tyre 2.8 bar!
Front wheel fork 1:	fixed around vertical axis – suitable for rough terrain

Fork material 1:	- aluminium alloy EN AW 2017
Front wheel 2:	6"
Wheel material:	- aluminium centre
Front wheel tyre 2:	- full rubber (not inflated)
Front wheel fork 2:	- rotating around vertical axis – suitable as a medical trolley on hard surfaces and for lower speeds
Fork material 2:	- aluminium alloy - glass-filled plastic (for S only)

Other important properties:

- The front and rear frame arches protect the transported person's head and body in case the medical stroller/trolley is overturned/overthrown;
- The rear axle wheel camber by 10° ensures extreme stability against a side overturn of the medical stroller/trolley;
- Safety belts with five-point safety buckles;
- To achieve the maximum service life, all fastening materials are made of stainless steel A2
- An installed and integrated bag for accessories and personal items; it can be removed and used as a full-valued rucksack (including shoulder straps);
- Possibility to modify the handbrake from the right to left version.

Optional accessories:

- Mosquito net
- Windstopper – protective covering against adverse weather conditions (wind, snowing, dust, etc.)
- Raincoat
- Transport bags for transport of the folded medical stroller/trolley and removed wheels
- Other accessories according to the manufacturer's current offer

MAINTENANCE, CARE AND STORAGE OF MEDICAL STROLLER/TROLLEY

A. ***Maintenance of the wheel hitch***
- Before each ride make sure that the hitch and safety strap are connected properly.
- Regularly check that the hitch is not damaged, broken, etc. Replace it in the case of the first sign of damage.
- Any damage/break of any part of the xRover medical stroller/trolley should be repaired/replaced immediately to prevent any personal injuries.

B. ***Care for the covering/canopy***
– Your xRover medical stroller is made of a durable, strong, waterproof fabric – Kortexin™ or Cordura™. Clean the covering only with ordinary soap or a mild cleaner and warm water. Let air dry.

NOTICE
The colours of the covering and other parts of the medical stroller/trolley may change due to the weather, sunlight and atmospheric

C. ***Wheels and central axes***
- We recommend having the wheels (rear 20" and front 14") checked by a standard bicycle repair shop at least twice a year. For safety reasons, make sure that the wheel spokes or central axis are not loose before each use of the medical stroller/trolley.

D. ***Wheel frame and mounting***
– Regularly check that all nuts and bolts are tightened properly.

E. ***Storage***
– Store the medical stroller/trolley in a dry and well-ventilated place. Before storing, make sure that the medical stroller/trolley is dry; this will prevent it from becoming mouldy. If the medical stroller is not in use, protect it against sunshine; this will prevent it from discolouring. Check all parts of your medical stroller/trolley before each use!

NOTICE

SAFETY INSTRUCTIONS

Important rules for safe use of your xRover medical stroller/trolley.

1. Read carefully all instructions before using the medical stroller/trolley! Incorrect understanding and failure to follow these instructions may lead to an otherwise avoidable accident at which you and/or your passengers may sustain a serious or fatal injury.
2. Safe and correct use of this product is your responsibility! Before using your medical stroller/trolley, take a trial bike ride, go for a walk or run or hike with the medical stroller loaded (to more than the expected weight of passengers with load) to assure that you will handle the loaded medical stroller/trolley during each of these activities. Be extremely careful when operating the medical stroller/trolley off roads. Apart from the safe ride principles, always follow the rules stated below.
3. Make sure that your bike is in good operating condition. We recommend carrying out regular safety checks by a certified bicycle mechanic.
4. Do not modify the medical stroller and bike. If you are not sure whether your bike is compatible with the medical stroller, contact the manufacturer – Volter s.r.o.
5. Transported persons must be fixed appropriately in relation to their age, handicap or physical needs. If required, the manufacturer can modify the medical stroller according to passengers' individual needs.
6. Do not exceed the maximum allowable loads of medical strollers/baby buggies – this applies to each model separately, see page 4, Technical data. This weight is the highest allowable load capacity of the seat including load. Objects transported in the medical stroller/trolley must be properly fixed to prevent them from moving during ride. An unstable load and overloading cause worsening of the stability and driving of the medical stroller/trolley.
7. Always safely and firmly fasten the straps around the shoulders, waist and crotch of the passengers. Regularly check the position of the shoulder strap. Make sure that passengers cannot put their fingers in the wheel spokes. Passengers must not jump, swing and lean in the medical stroller/trolley.
8. Keep an eye on the passengers in the medical stroller/trolley at all times.
9. For a smooth ride, keep the tyre-tubes of the medical stroller/trolley inflated to the recommended pressure shown on the tyre side or on page 4, Technical data. Check the pressure in the tyre-tubes before each use. Over-inflated tyre-tubes may break and cause an accident of the medical stroller/trolley. Under-inflated tyre-tubes wear significantly and change the driving properties of the medical stroller/trolley.
10. Do not use a stroller for carrying other load.
11. When falling the wheel or the stroller could be damaged.
12. Do not presume your right of way. Do not use your medical stroller/trolley in areas with heavy traffic such as busy streets or in any places where riding the medical stroller/trolley could be unsafe.
13. The medical stroller/trolley is equipped with many reflective elements.
14. When riding the medical stroller on public roads, always follow all traffic regulations and use the correct signalling. You are obliged to follow the Road Traffic Act (Act No. 361/2000 Coll., on road traffic).
15. Every time you stop the medical stroller/trolley, secure it against movement by applying the handbrake, see page 17, Chapter 3.
16. Always use the protective mosquito net or windstopper during the ride in a terrains, see Chapter 8.1.

NOTICE

YOU WILL ALWAYS FIND ALL IMPORTANT NOTICES ON THE MEDICAL STROLLER/TROLLEY IN THESE PLACES!

1. Assembly and disassembly of the medical stroller/trolley

The medical stroller uses quick-acting components so both its assembly and disassembly can be performed in a few dozens of seconds.

1.1 Rear axle

The rear wheels are fixed using quick-acting half-axles. By pressing the cap on one end of the axle the lock on the opposite side is released and the axle can be slid in/out the rear wheel hub.

1 – Push

2 – Locking balls release

Figure 2

1.1.1 Assembly

is to be started by inserting the half-axle in the rear wheel hub – slide the axle fully in the rear wheel hub.

Figure 3

Figure 4

A – press the cap to unlock the lock and **B** – slide the axle in to rear axle block.

Figure 5

Figure 6

Insert the assembly fully into the block, release the cap and make sure that the wheel is secured in the block safely.

Figure 7

Use the same procedure to install the other rear axle wheel. Both rear wheels are fully interchangeable; if you have a cyclocomputer installed, the wheel with the magnet must be installed on the left-hand side (when looking from the back).

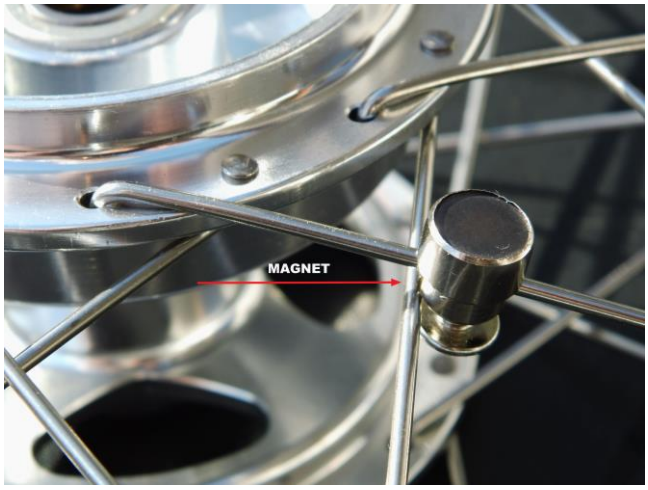

Figure 8

1.1.2 Disassembly is to be performed in reversed order; **A** – grasp the rear wheel at the central hub, **B** – press the half-axle cap and **C** – fully release the wheel by pulling.

For the subsequent transport, both dismantled rear wheels can be jointed together using one half-axle; keep the other half-axle carefully not to lose it, preferably in one of the storage bags on the medical stroller/trolley.

Figure 10

1.2 Front axle

The front wheels with forks are fixed to the medical stroller/trolley with quick-acting clamps. Loosen the lever to unlock the clamp, tighten it to lock the clamp; locking can be regulated by tightening or loosening the nut on the opposite end of the bolt. Handle the nut only by hand when the clamp is unlocked.
The front axle assembly contains six quick-acting clamps; the two horizontal ones serve for fixing the fork with the front wheel, the inner vertical pair serves for adjusting the fork tilt and the outer vertical pair serves for fixing and adjusting the cross tube of the front axle. Additional towing devices can be fixed to the outer ends of this tube.
The whole assembly is delivered in assembled and adjusted state; the owner only fixes the selected front wheel with fork and adjusts the required fork tilt.

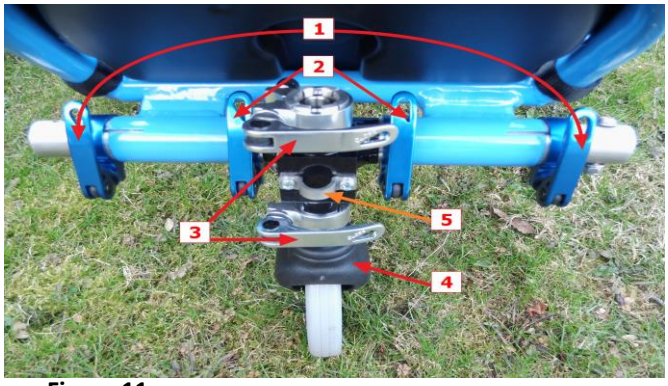

Figure 11

1 –Fixing the position of the front axle cross tube

2 –Adjusting and fixing the front fork tilt

3 –Front fork attachment

4 –Front fork with 6" swing wheel

5 –Towing eye

1.2.1 Assembly of the front fork with wheel

Loosen both horizontal clamps on the front axle block and slide the fork extension in the hole in the block. The clamps are fixed to the block also in loosened state with the mount engaged in the block slot. This prevents the clamp from slipping off or losing. The clamp can only be removed from the block using a special tool.

Figure 12

Turn the extension in the hole so that the pin (protruding dowel screw, Fig. 13 and Fig. 14, point **2**) engages in the recess in the front axle block and fully slide the extension in the block.

Figure 13

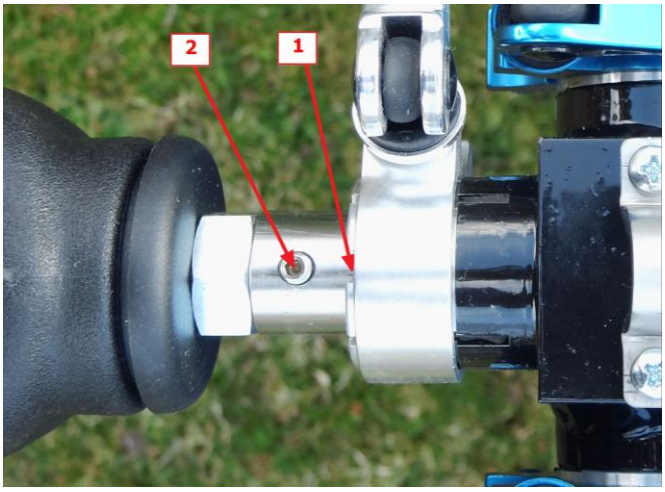

Figure 14

Turn both horizontal clamps to the appropriate position so that the levers do not collide with the levers of vertical clamps. Lock both horizontal quick-acting clamps.

1.2.2 Disassembly of the front fork with wheel

Loosen both horizontal quick-acting clamps (Fig. 11, point **3**) and (Fig. 12).
Take the front fork extension out of the front axle block.

1.2.3 Removing the front wheel from the fork

The 14" front wheel is fixed to the fork with a quick-acting axle. For transport or service reasons, it may be necessary to remove the wheel from the fork.

Figure 14 LOCKED

Figure 15 RELEASED

Loosen the lever of the quick-acting axle. The axle ends engage in the recess in the fork, so even if the lever loosens accidentally during ride, the wheel will not fall out of the fork.

To loosen the wheel it is also necessary to loosen the nut on the opposite side of the axle by a few turns. The wheel can then be removed from the fork. The place for storing this wheel with fork is in the rear pocket of the rear bag on the medical stroller/trolley.

Figure 16 **Figure 17**

Perform assembly in reverse order.
The 6" wheel is fixed in the fork with an Allen head bolt with nut which serves also as the axle. If necessary, this bolt can be loosened and the wheel removed.

2. Adjusting the required alignment of the medical stroller/trolley

Select the required **front wheel** and fix it along with the fork to the front axle block (for the procedure see above). The block is symmetrical, it can be used from both sides if necessary.
Loosen the inner pair of vertical quick-acting clamps on the front axle.
Turn the wheel with fork to the required position. The tilt of the whole medical stroller/trolley can be changed by selecting the wheel size and turning the fork. In this way the maximum comfort of the transported person can be ensured.
Turn the inner pair of vertical quick-acting clamps so that their levers do not collide with the vertical clamps.
Lock the levers of the inner pair of vertical quick-acting clamps. The front block is now firmly fixed to the cross axis of the front axle.

The 6" front wheel can be positioned in the following range:

Figure 18

The 14” front wheel can be fixed in the following range:

Figure 19 – medical stroller seat tilt: 1 – sitting position; 2 – lying position

The alignment of the rear axle must be adapted to the set tilt of the medical stroller/trolley to compensate for the possible
toe-in or toe-out of the rear wheels. The wrong alignment causes an increased exertion and an increased wear of the rear wheel tyres; in addition, an asymmetrical adjustment could cause slide-slipping when moving forwards or other problems with the traction of the medical stroller/trolley.

Place the medical stroller on a **hard level** surface.
The rear axle block is fixed with a quick-acting clamping bolt on the axle. Loosen the clamping bolt lever.

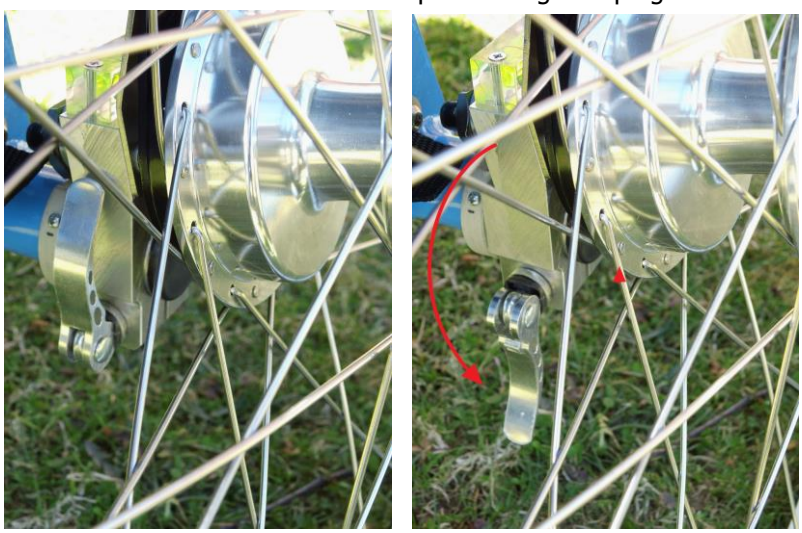

Figure 20

Turn the block with the brake on the rear axle in such a way that the bubble in the built-in spirit level is between the marks. The spirit level is on the top of the block behind the brake carrier and is best accessible when looking from the back of the medical stroller/trolley.
Owing to precise manufacturing tolerances, it is relatively hard to turn the rear axle block even with the quick-acting clamping bolt loosened; when the lever is locked, the block is then fixed on the axle firmly and reliably.
When checking the block position setting, the medical stroller must stand stably on all three wheels.

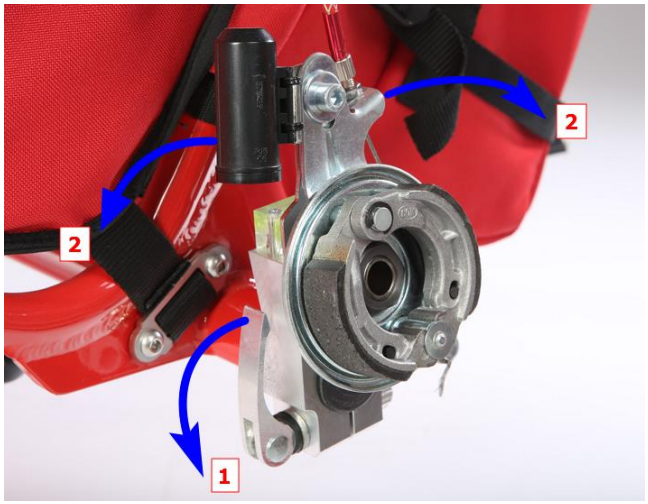

1 – rear axle block/hub lock release
2 – rear axle block trimming

Figure 21

Figure 22

NOTICE!

Always observe the correct geometry settings of the rear wheels of the truck. In case of poor handling and operation of the truck with an improperly adjusted geometry can cause rapid destruction of tires and wheels crash truck / buggy.

After the block is set to the correct position, lock again the lever of the quick-acting clamping bolt.
Repeat the same procedure with the other wheel.

Finally, recheck the alignment according to the spirit levels on the left and right blocks. The correct alignment is a guarantee of excellent driving properties of the medical stroller/trolley.

3. Brake adjustment

Both drum brakes are operated simultaneously with one double brake lever; its locking pin enables you to use the brake also as a parking brake. The brake lever is located on the handle of the medical stroller/trolley. Adjustment of the same effect of both brakes is very important to maintain the straight travel direction of the medical stroller/trolley when braking. Due
to long-term use, the cable lengths change and it is necessary from time to time to adjust the brakes individually to the same braking action on both wheels. Significantly worn cables must be replaced.
The basic adjustment is performed with the clamp bolt with nut on the brake moving lever.

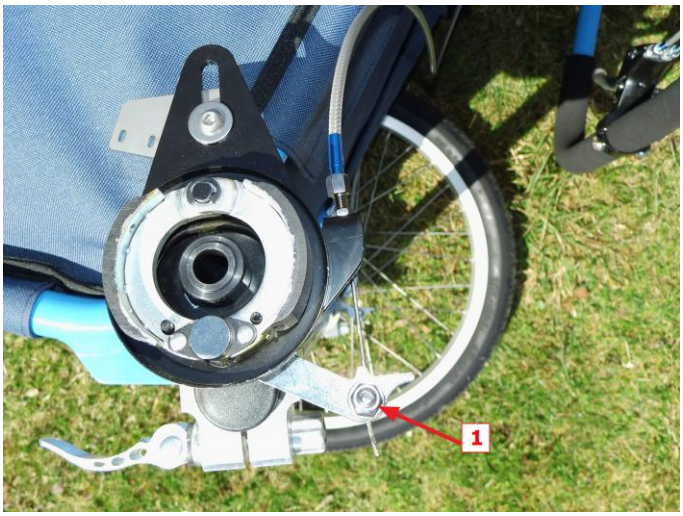

1 – Bolt for basic brake adjustment

Figure 23

Fine adjustment can be carried out **1** – with the locking ends on both ends of the outer sheath of the brake line.

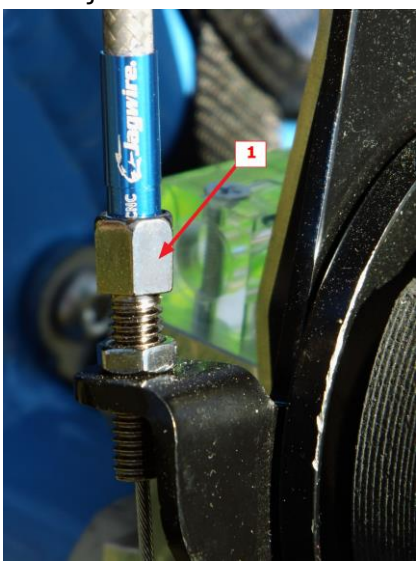

Figure 24

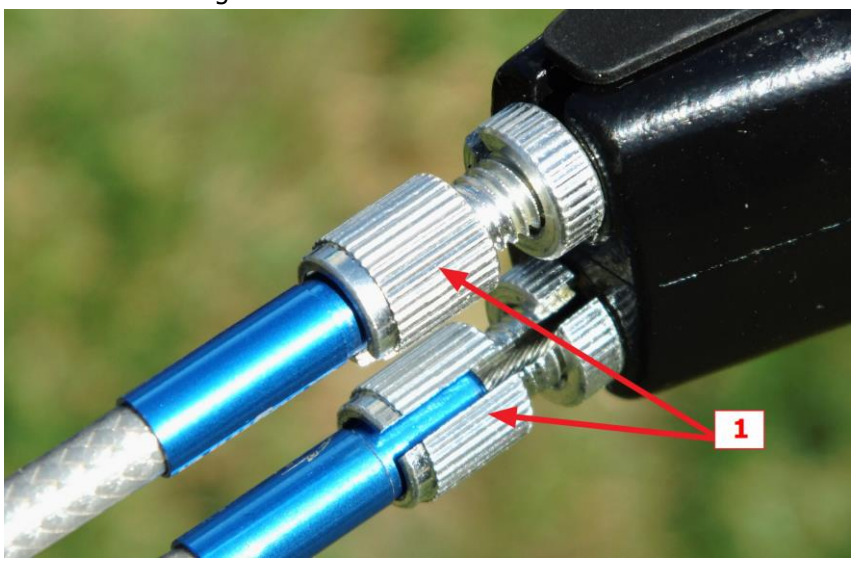

Figure 25

The braking action is controlled by the force of pressing the brake lever. Drum brakes provide a wide range of braking action from gentle braking to adjust speed to strong braking to quickly stop the medical stroller/trolley.
By strongly pressing both the brake lever (Fig. 26, point **1**) and the locking pin (Fig. 26, point **2**) simultaneously the brake will be blocked and the medical stroller is braked continuously (parking brake). This mode prevents the medical stroller/trolley from starting spontaneously.
By strongly pressing the brake lever (Fig. 26, point **1**) again, the locking pin and thus the whole system is released; after releasing the brake lever the medical stroller is fully braked off and can move freely.

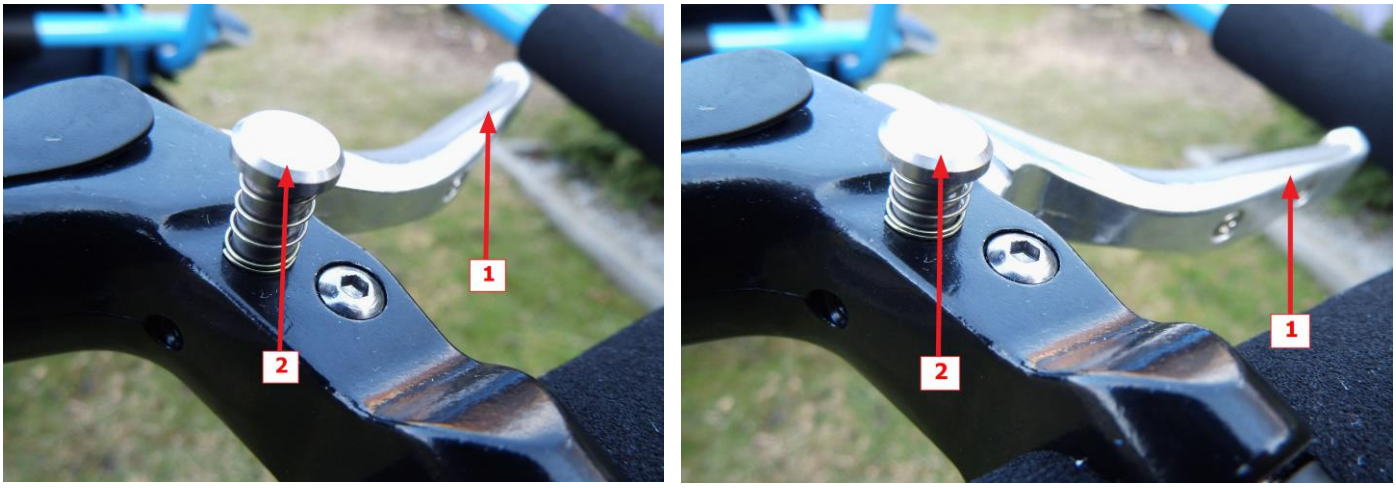

Figure 26 **A – parking brake deactivated** **B – parking brake activated**

NOTICE

Always ensure that it is braked correctly! Especially when there are passengers in it and you leave the medical stroller without direct attendance and without the strap fixed on your wrist.

4. Handle

The medical stroller is equipped with a height adjustable handle. In the area of contact of hands with the handle, it is provided with foam covering for comfortable handling. To transport the medical stroller/trolley or to use towing devices, the handle can be folded down fully to lower the outer profile dimensions of the medical stroller/trolley.

The setting can be changed by simultaneously pressing BOTH grey buttons on the sides of the handle joint. The joint has several fixed positions; after releasing the grey buttons, the handle will be fixed in that position. The handle position does not affect the brake function.

Figure 27

5. Canopy

The medical stroller is equipped with a removable canopy to increase the comfort of transported persons and their protection against adverse environmental effects (rain, wind, snow, sunshine, etc.).
The canopy frame shape can be adjusted; the shape can be changed by simply pressing by hand in the required direction.

Figure 28

The canopy can be removed completely; this is done by simultaneously pressing the red button on the side of the canopy joint and pulling the frame upwards in the direction of the guide rail.

Figure 29

Remounting the canopy is done by placing the joint in the rail lead and moving the frame downwards until the red lock engages in the rail recess. Jumping-out of the red button indicates that the limit position has been reached and that the joint is locked in this position.
Mounting of the canopy is easier when it is folded up. It is important that the cloth covering of the canopy is mounted from the rear of the upper arch of the frame of the medical stroller/trolley and before it is unfolded the covering position is adjusted so that the covering can be stretched correctly.

6. Fastening the transported person

For this purpose the medical stroller is equipped with safety straps fixed to the frame of the medical stroller/trolley. For a better comfort, the shoulder straps are provided with soft sleeves; the position of these sleeves is adjustable from the back of the medical stroller/trolley by extending or shortening the connecting strap.
All straps are connected with a certified 5-point buckle which can only be unbuckled by successively pressing individual circular elements on its body. This significantly reduces the risk of undesired complete unfastening of the transported person.

Figure 30

WARNING: Incorrectly fastened straps may lead to a serious or fatal injury of passengers in the case of an accident.

7. Carrying the medical stroller/trolley with load

If necessary (heavy terrain, damage of wheels, emergency situation, etc.), the outer protective frame can be used as a handle for carrying the medical stroller/trolley with load; the frame is dimensioned for this use. The suitable length of handles allows finding the optimum balance for grasping and carrying the medical stroller/trolley. It is not necessary to install any wheels in this type of use. Two persons are required to carry the medical stroller/trolley.
Remove the cloth fenders from the medical stroller/trolley from the inside of the medical stroller/trolley outwards. Release all Velcros and straps with clips and remove the fenders. Dismantle the wheels, if necessary.
Each person stands on one side of the medical stroller/trolley. Transport can be started by grasping and lifting the medical stroller/trolley.

Figure 31

Figure 32

NOTICE !

Range of motion of the joint is sufficient for standard applications. Avoid increased stress for the extreme positions of the joint range of motion!

8. Other accessories

8.1 Mosquito net, windstopper and waterproof

8.1.1. Mosquito net (Tropico)

It is possible to fix a mosquito net, windstopper and waterproof to each medical stroller. The mosquito net is fixed with Velcro the other end of which is on the bottom part of the front edge of the canopy. Place the mosquito net (Fig. 33, point **1**) on the inner other part of the Velcro on the canopy (Fig. 33). Then place the front side over the front arch of the medical stroller frame (Fig. 34) and fix the rear corners by turning the end tapes around the medical stroller frame (the vertical part of the extended handle frame) and snap (Fig. 33). In the middle of the longest sides of the mosquito net, snap the snap on the tape onto the counterpart located on the side of the medical stroller seat (Fig. 34).
The manufacturer supplies a uniform model for all S size medical stroller/trolley variants.

WARNING: An absence of the mosquito net may expose the passengers to insects, flying stones or other debris.

Figure 33

Figure 34

8.1.2. Windstopper

The windstopper is fixed on the medical stroller in the same way as the mosquito net. Snap it (Fig. 33, point **2**) to the outer other part of the Velcro on the canopy edge. So the windstopper is stretched over the mosquito net. The order of fixing these parts can be combined arbitrarily.

Figure 35

Figure 36

The manufacturer supplies a uniform model for all S size medical stroller/trolley variants.

WARNING: The windstopper protects transported persons against wind and partly against snow. However, it does not fully substitute the waterproof function and it is not water-impermeable in a longer stay in rain.

8.1.3. Raincoat

The medical stroller waterproof is to be placed over the canopy and seat. (It can be also placed over the fixed mosquito net with windstopper.) Fix it in the back with the Velcro around the medical stroller frame (Fig. 37), in the front, stretch it over the front arch of the medical stroller frame. On the sides, stretch is over the handrails (sides) of the medical stroller/trolley. Open the vent holes on the waterproof for a better transport comfort of passengers (Fig. 38).

Figure 37 **Velcros for fixing to the medical stroller/trolley construction**

Figure 38 **Vent hole – 2 on each waterproof**

8.2 Rear bag

The rear bag serves for transport of components of the medical stroller (14" front wheel with fork, waterproof, mosquito net, windstopper, 6" front wheel, and others). The rear pocket of the bag is used for wheels and other "dirty" components.
Use the front part of the bag for other accessories and personal items.

Figure 39

The rear bag can be removed from the medical stroller/trolley (by unclipping the clips that fix the bag to the medical stroller frame). Remove the shoulder straps from the pocket on the bag back and connect the straps to the clips on the lower edge of the bag. The bag can be used as a hand rucksack.

Figure 40

Figure 41

Always use all provided straps to close the rear bag, including the central strap which fixes the bag against falling down.

Do not let any objects protrude out of the bag. They could make the medical stroller/trolley unstable, an object could fall out (be lost), but also the medical stroller/trolley could crash. It is made in the respective colour combinations like medical stroller models.

NOTICE
Never overload the bag, it is not designed for the transport of material, only for personal items and medical stroller accessories. Overloading the bag could cause a turnover of the medical

8.3. Safety hand strap

To have a better control of the medical stroller/trolley, it is always useful to have the safety strap mounted as it prevents the possible leaving of the medical stroller/trolley away and thus it increases the control safety.
The strap can be mounted on the handle permanently and if used it is put on the wrist of the person who will operate the medical stroller/trolley.

Figure 42

NOTICE: You should always use the safety strap when performing such activities with the medical stroller/trolley at which the operating speed exceeds 6 km/h, i.e. the speed of walk, or when you are in a terrain or environment with an increased risk of unstable movement.

8.4. Fixation insert

The fixation insert is used to reduce the internal space of the medical stroller/trolley seat. It is recommended to use it when transporting children up to about 2 years of age, for whom it provides a better comfort in the seat. At the same time, additional fixation inserts better stabilize children's figures and their heads when sitting in the medical stroller/trolley.

The elements are variable and can be adapted to the needs of that person.
Unbuckle the 5-point buckle (Fig. 54). Remove the red connecting element of the buckle from the middle strap and take the strap out of the loops on the seat (Fig. 53, point **1**).
Release the zipper (Fig. 53, point **2**) on the external side of the medical stroller/trolley and loosen the protective coverings (pads) of the shoulder straps. Lower them as low as possible. Then insert the fixation insert in the medical stroller/trolley seat. Pull the shoulder straps including pads through the selected holes on the fixation insert (Fig. 54). Pull through the lower middle strap in the same way.

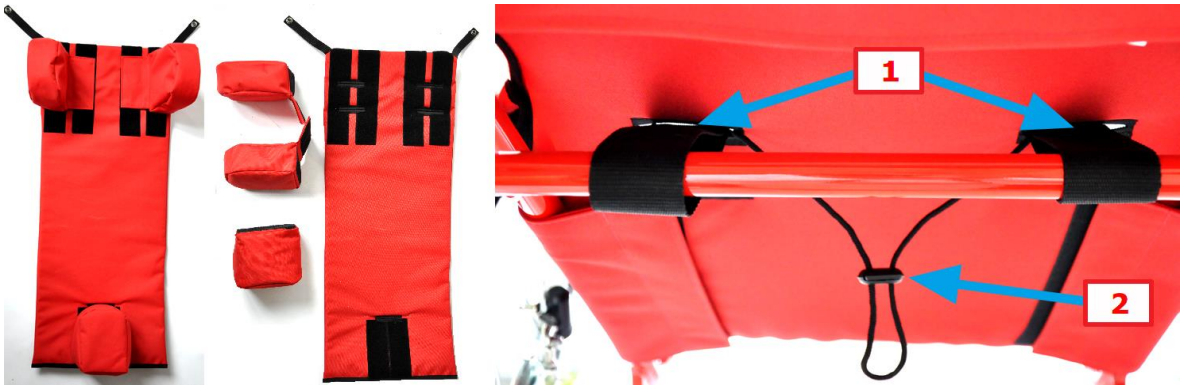

Figure 43

1 – shoulder straps fixed on the frame tube
2 – zipper on shoulder straps

Figure 44

With the upper two snaps (Fig. 44) fix the insert on the counterparts (Fig. 45) which are located on the rear side of the flap of the medical stroller/trolley seat. As necessary, select the fixation height of the shoulder straps and lower middle strap. The shoulder straps have 2 adjustment heights, the lower middle strap also has 2 variants. Before the final pull-through and mounting of the straps back on the medical stroller construction, seat your child inside the seat to find out the correct adjustment of these straps and to choose the correct holes for straps.

Figure 45

NOTICE: When handling the medical stroller/trolley and mounting or removing the fixation insert, always follow all instructions for operation of the medical stroller/trolley. Only perform it if you are absolutely sure that the medical stroller/trolley cannot start spontaneously, overturn or otherwise threaten your baby or operating persons.

Then pull over the shoulder straps (pads) and with the zipper on the external side of the seat tighten them so that they cover the straps and buckles well and do not slide down on the straps.

With other snap hooks you can adjust the required ranges of individual fixation strap parts. Place the protective and fixation pads in the medical stroller so that they fix the head of the transported person well, and the middle wedge to prevent the person from slipping off. All must be adjusted in such a way that the transported person has the maximum comfort.

The transported person must be fixed firmly, but the strap must not clasp or otherwise limit them. A slight movement of the fixed person is possible and desirable (Fig. 30).

The manufacturer supplies fixation inserts in the respective colour combinations like the medical stroller models.

8.5 Winter bag

Figure 46 **A** **B** **C**

The winter bag is an accessory to the medical stroller/trolley equipment and it can be added to any variant of model S. It is comprised of two parts (Fig. 46, **A**). The main upper part with zipper and holes for 5-point straps (Fig. 46, **B**) and the lower part (feet bag) which serves for extending the bag for bigger children. It is fully removable and can be cleaned by washing according to the symbols on the attached label. Owing to this, babies can be transported in the bag with shoes, which increases the operating comport.
Mount the bag in the same way as the fixation insert, Chapter 8.4. of this manual. Fix the upper side fixing straps on the bag by wrapping around the medical stroller construction (in the same way as in the fixation insert) and fix on the counterpart of the snap on the rear side of the seat. If the fixation insert is installed in the medical stroller, fix this snap on the counterpart on the rear side of the canopy. If the medical stroller/trolley is equipped with a fixation insert, the winter bag can only be fixed onto the side straps if the canopy is mounted on the medical stroller/trolley.
The upper part of the bag can also be cleaned by washing according to the symbols on the attached label.

8.6 Additional bags

8.6.1. Hip pack

Figure 47

Figure 48

The sports hip pack can be worn also separately around the waist. It has an insulated drink bottle pocket, a double zipped pocket and a fastening strap. It can also be easily placed on the medical stroller/trolley handle. It is made in the respective colour combinations like the medical stroller models.

8.6.2. – Hand bag

Figure 49

Figure 50

The sports bag can be worn also separately over the shoulder. It has two inner pockets, a Velcro flap and an adjustable shoulder strap. With the side Velcros it can be easily fixed onto the medical stroller/trolley handle. It is made in the respective colour combinations like the medical stroller models.

This PRODUCT OPERATION MANUAL was issued on January 1, 2015 as version 1.1 and it is applicable until a new one is issued.

The manufacturer reserves the right for changes in individual components due to the technical development of the product and accessories.

Volter s.r.o., Žitná 26/570, Praha 2, 120 00, Czech Republic

info@volter.cz, www.volter.cz

All rights reserved.